SPECTRACOOL
AIR CONDITIONER
G52 460V MODEL
INSTRUCTION MANUAL

Rev. A
© 2022 nVent
P/N 89209669

89209669

TABLE OF CONTENTS

WARRANTY AND RETURN POLICY 3
RECEIVING THE AIR CONDITIONER 3
HANDLING AND TESTING THE AIR CONDITIONER 3
HOW TO READ MODEL NUMBERS 3
TECHNICAL INFORMATION 4
- Sequence of Operation 4
  - Heating 4
  - Cooling 4
- Standard and Optional Component Operation 4
  - Thermostat 4
  - Remote Access Control (optional) 4
  - Head Pressure Control 4
  - Contactor 4
  - Overload 4
  - Phase Monitor 5
  - 460V to 230V Transformer 5
  - 230V to 10V Transformer (optional) 5
  - a230V to 24V Transformer and Relay (optional) 5
- Schematics and Wiring Diagrams for Thermostat Control 6
  - G52 Generic Schematic With Thermostats (actual unit options may vary) 6
  - G52 Generic Wire Diagram With Thermostats (actual unit options may vary) 7

INSTALLATION INSTRUCTIONS With Thermostats 8
INSTALLATION INSTRUCTIONS WITH REMOTE ACCESS CONTROL 8
DIMENSIONAL DRAWINGS 10
- 8000 BTU/Hr. With Thermostats 10
- 12000 BTU/Hr. With Thermostats 10
- 8000 BTU/Hr. With Thermostats and Heat 11
- 12000 BTU/Hr. With Thermostats and Heat 11

DIGITAL THERMOSTAT CONTROLLER (OPTIONAL) 12
- Overview 12
- ENERGIZING THE CONTROLLER 12
- CONTROL STATUS INDICATION 12
- DISPLAYING AND CHANGING PROGRAM Settings 15
  - To view or access the settings 15
- Heat/Cool Operating Parameters 15
- Alarm Parameters 15
- DISPLAYING TEMPERATURE DATA ON SCREEN 17
- COMPRESSOR RESTART TIME DELAY 17
- ALARM OUTPUT CONTACT 17
- ALARM INPUT CONNECTION 17
- PRIMARY-SECONDARY (PS) MODE 18
- Connecting units together in Primary/Secondary mode 18
- Connecting units together in Lead/Lag mode 19
- AIR CONDITIONER UNIT REMOTE COMMUNICATION FEATURES 20
  - USB COMMUNICATION 20
  - ETHERNET COMMUNICATION 20
- USING HOFFMAN PC INTERFACE TOOL 21
  - USB COMMUNICATION MODE 21
  - USB COMMUNICATION MODE 22
  - ETHERNET COMMUNICATION MODE 23
- REMOTE ACCESS CONTROL PIN-OUT 24
- Schematic and Wiring Diagram for Remote Access Control 25
  - G52 Generic Schematic With Remote Access Control (actual unit options may vary) 25
  - G52 Generic Wire Diagram With Remote Access Control (actual unit options may vary) 26

DIMENSIONAL DRAWINGS 27
- G52 Generic Model Drawing With Remote Access Control 27

MAINTENANCE 28
- Compressor 28
- Inlet Air Filter 28
- How To Remove, Clean or Install a New Inlet Air Filter 28
- Condenser and Evaporator Air Movers 29
- Refrigerant Loss 29

F-GAS INFORMATION 29
- Refrigerant Properties Chart (R 134a) 30
- Functional Data 30
- 8000 BTU/Hr. Unit Characteristics 31
- 12000 BTU/Hr. Unit Characteristics 32

SERVICE DATA 33
- Components List With Thermostat 33
- Components List With Remote Access Control 34

TROUBLE SHOOTING 36
- Basic Air Conditioning Trouble Shooting Check List - Thermostat Version 36
- Symptoms and Possible Causes - Thermostat Version 37
- Basic Air Conditioning Trouble Shooting Check List - Remote Access Control Version 38
- Symptoms and Possible Causes - Remote Access Control Version 39

NOTE: Some of the information in this manual may not apply if a special unit was ordered. If additional drawings for a special unit are necessary, they have been inserted. Contact nVent Equipment Protection if further information is required.

© 2022 nVent

WARRANTY AND RETURN POLICY

https://hoffman.nvent.com/en/hoffman/warranty-information

RECEIVING THE AIR CONDITIONER

Inspect the air conditioner. Check for concealed damage that may have occurred during shipment. Look for dents, scratches, loose assemblies, evidence of oil, etc. Damage evident upon receipt should be noted on the freight bill. Damage should be brought to the attention of the delivering carrier -- NOT to nVent Equipment Protection -- within 15 days of delivery. Save the carton and packing material and request an inspection. Then file a claim with the delivering carrier.

nVent Equipment Protection cannot accept responsibility for freight damages; however, we will assist you in any way possible.

HANDLING AND TESTING THE AIR CONDITIONER

If the air conditioner has been in a horizontal position, be certain it is placed in an upright, vertical or mounting position for a minimum of five (5) minutes before operating.

⚠ CAUTION

Do not attempt to operate the air conditioner while it is horizontal or on its side, back or front. The refrigeration compressor is filled with lubricating oil. This will cause permanent damage to the air conditioner and also voids the warranty.

TEST FOR FUNCTIONALITY BEFORE MOUNTING THE AIR CONDITIONER TO THE ENCLOSURE.

Refer to the nameplate for proper electrical current requirements, and then wire the unit to a properly grounded power supply using copper conductors only. Power supply wiring should be restrained after field installation to ensure no contact with internal fan. Minimum circuit ampacity should be at least 125% of the amperage shown on the unit nameplate. No other equipment should be connected to this circuit to prevent overloading

Immediately after applying power, the evaporator blower (enclosure air) should start running. Operate the air conditioner with the compressor running for five (5) to ten (10) minutes. You will need to set the cooling thermostat or controller setpoint below the ambient temperature to operate the compressor.

Condenser air temperatures should be warmer than normal room temperatures within a few minutes after the condenser impellers start.

See Sequence of Operation on page 4 for specifics on how the unit operates when powered up.

HOW TO READ MODEL NUMBERS

G52	12	4	6	G150
1	2	3	4	5

1. Identifies the type/family of air conditioner and the approximate height (i.e. G52 = Global family about 52 inch high).
2. This is the air conditioner's listed capacity in BTU/Hr. at rated conditions. (i.e. 12 = 12,000 BTU/Hr. at 131/131 F)
3. 4 = 460 Volt
4. 6 = 50/60 Hz or 60 Hz only
5. Unique set of numbers for each air conditioner which identifies the accessories on a model.

© 2022 nVent

TECHNICAL INFORMATION

SEQUENCE OF OPERATION

The air conditioner comes standard with two internally mounted thermostats. There are two modes of operation; heating and cooling. During heating and cooling modes, the evaporator fan will be running.

HEATING

When the enclosure temperature is below the heating thermostat setpoint, power is applied to the heaters. When the enclosure temperature is 10 degrees above the setpoint, the heater is powered off.

COOLING

When the enclosure temperature is above the cooling thermostat setpoint, power is applied through the thermostat. The compressor is then energized either directly or through a contactor if unit requires one. The condenser impellers will start immediately if the unit is not equipped with an optional head pressure control switch. If the unit is equipped with an optional head pressure control switch, the condenser impellers will start once the refrigerant pressure reaches the setting of the switch. Component specific information is listed below.

Operating the air conditioner below the minimum ambient temperature or above the maximum ambient temperatures indicated on the nameplate voids all warranties. DO NOT set the enclosure thermostat to a temperature lower than 70 F. Doing so can increase the likelihood of frost buildup on the evaporator coil.

The moisture that the enclosure air can contain is limited. If moisture flows from the drain tube continuously this can only mean that ambient air is entering the enclosure. Be aware that frequent opening of the enclosure's door admits humid air that the air conditioner must then dehumidify.

STANDARD AND OPTIONAL COMPONENT OPERATION

THERMOSTAT

The G52 air conditioner uses our standard 10-1061-16 thermostat. The thermostat setpoint equals the temperature that the air conditioner turns off. The thermostat has a 10 F differential from setpoint until it calls for cooling or heating. An example of operation is shown below.

FOR COOLING (75-100 F RANGE):

- Thermostat setpoint = 80 F
- Cooling turns on at 90 F
- Cooling turns off at 80 F

FOR HEATING (55-65 F RANGE):

- Thermostat setpoint = 55 F
- Heating turns on at 55 F
- Heating turns off at 65 F

NOTE: For testing purposes only, the thermostat stop screw may be removed (on units so equipped) to allow settings below 70 F. After testing, replace the stop screw and verify that the thermostat cannot be set below 70 F. Extended operation below 70 F can cause coil freeze ups resulting in reduced load and/or unit damage.

REMOTE ACCESS CONTROL (OPTIONAL)

See DIGITAL THERMOSTAT CONTROLLER (OPTIONAL) on page 12

HEAD PRESSURE CONTROL

Unit is set at the factory, no adjustment necessary.

At a saturated condenser temperature of 85 F (95 psig), the condenser fans will power off. At a saturated condenser temperature of 118 F (165 psig), the condenser fans will power on.

CONTACTOR

The contactor on this model uses a 230V coil.

OVERLOAD

Set overload reset setting to automatic "A" and trip point dial to 3.0A.

© 2022 nVent

PHASE MONITOR

This product is equipped with Phase/Voltage Protection. Please verify correct phasing and voltage before operating. Note the fans may still operate if phasing is incorrect, but the compressor will not, so the unit will not cool. Illuminated light on Phase Monitor indicates phase is correct. See dimensional drawings on page 10 and page 11 for phase monitor location

If the light is not illuminated, disconnect power from the unit and swap any two power leads at the terminal block. This should correct the phasing. The light should now illuminate when power is reapplied.

460V TO 230V TRANSFORMER

The 230V from this transformer powers the fans, contactor and optional transformers. 460V is only used to run the compressor.

230V TO 10V TRANSFORMER (OPTIONAL)

This transformer powers the thermal display only.

A230V TO 24V TRANSFORMER AND RELAY (OPTIONAL)

The transformer and relay are used to operate the condenser blower and compressor by using a customer supplied, remote mounted door switch. This is not a safety door switch, but rather, only helps to reduce condensation at the evaporator coil if the door is opened. The unit will remain electrified when the door switch is operated with the evaporator fan continuing to operate, and potentially, if temperatures are low enough, the heater may continue to operate on outdoor models.

© 2022 nVent

SCHEMATICS AND WIRING DIAGRAMS FOR THERMOSTAT CONTROL

G52 GENERIC SCHEMATIC WITH THERMOSTATS (ACTUAL UNIT OPTIONS MAY VARY)

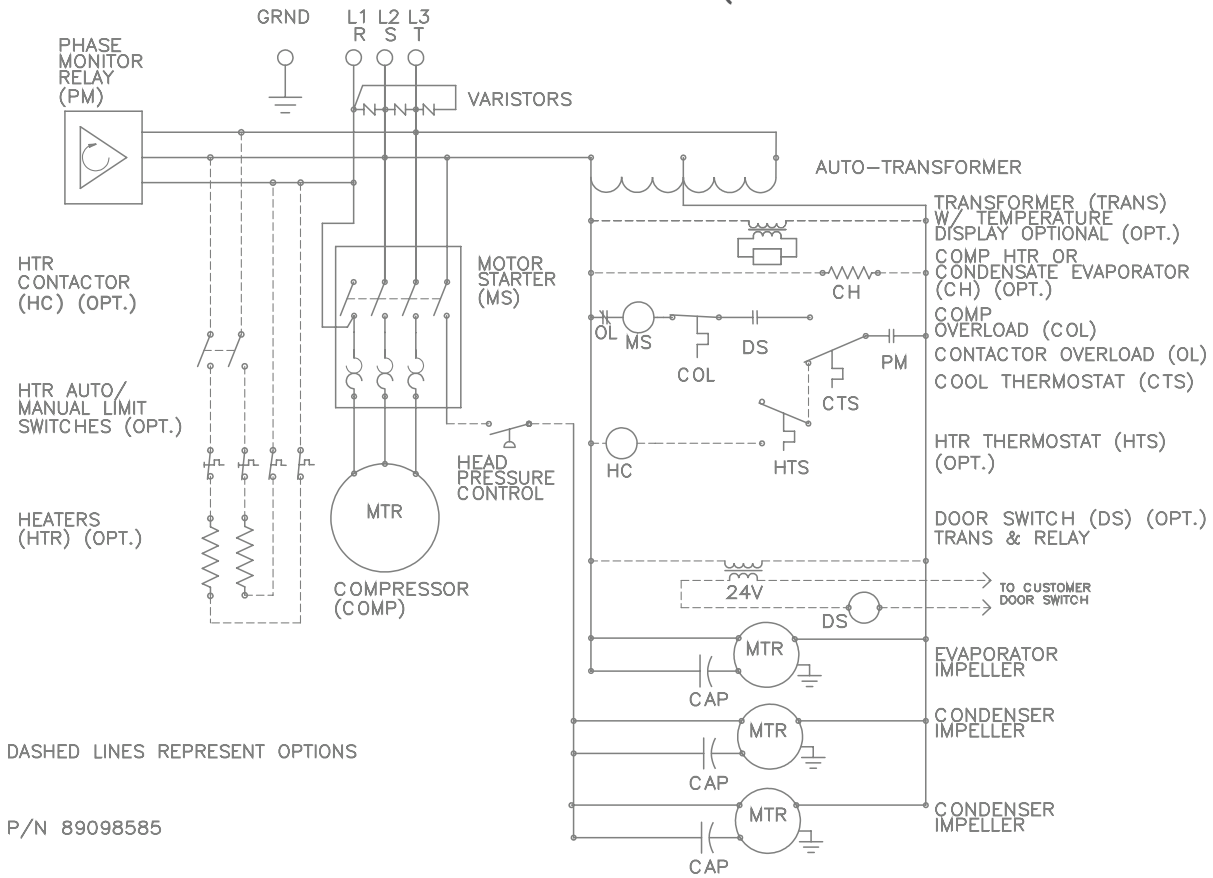

© 2022 nVent

G52 GENERIC WIRE DIAGRAM WITH THERMOSTATS (ACTUAL UNIT OPTIONS MAY VARY)

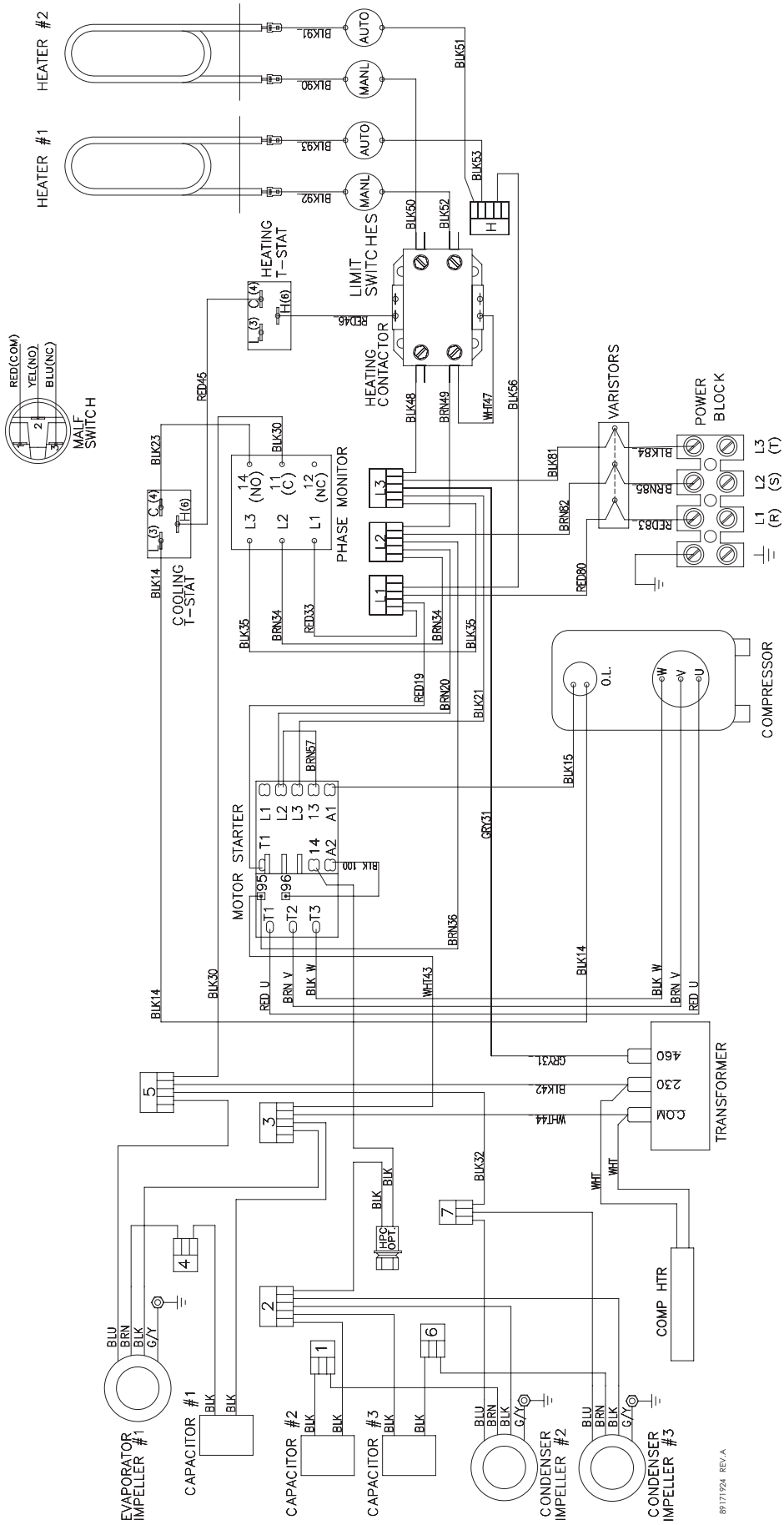

© 2022 nVent

INSTALLATION INSTRUCTIONS WITH THERMOSTATS

1. Inspect the air conditioner and verify correct functionality before mounting the air conditioner. See HANDLING AND TESTING THE AIR CONDITIONER on page 3.
2. Using the mounting gasket kit provided with the unit, install gaskets to the air conditioner, see Figure 1 on page 9.
3. Mount air conditioner on enclosure taking care not to damage the mounting gasket. The mounting gasket is the seal between the air conditioner and the enclosure. Avoid dragging the air conditioner on the enclosure with the mounting gasket attached as this could cause rips or tears in the gasket and risk losing the water tight seal.
4. To avoid cross-threading mounting inserts, start bolts by hand before tightening with a wrench or ratchet driver.
5. Allow unit to remain upright for a minimum of five (5) minutes before starting. CAUTION! Air conditioner must be in upright position during operation.
6. Refer to the nameplate for electrical requirements. Wire the unit to a properly grounded power supply. The unit's terminal block is located behind the evaporator access panel on the rear (enclosure side) of the unit. For 3 phase units, once power is applied, verify that phase monitor light is illuminated which indicates correct electrical phasing. Electrical circuit should be fused with slow blow or HACR circuit breaker.
7. Some air conditioners require a remote mounted thermostat. Wire the thermostat outputs to the appropriate terminals on the 24 VAC terminal strip by noting the locations on the correct wiring diagram.
8. Set thermostat for required cabinet temperature. Refer to dimensional drawings on page 10 and page 11 for thermostat location. Note that the thermostat dial is protected by a plastic bushing during shipment. Remove and replace the plastic bushing to adjust the thermostat. Refer to Sequence of Operation on page 4 for thermostat adjustment and operation.

INSTALLATION INSTRUCTIONS WITH REMOTE ACCESS CONTROL

1. Inspect the air conditioner and verify correct functionality before mounting the air conditioner. See HANDLING AND TESTING THE AIR CONDITIONER on page 3.
2. Using the mounting gasket kit provided with the unit, install gaskets to the air conditioner, see Figure 1 on page 9.
3. Mount air conditioner on enclosure taking care not to damage the mounting gasket. The mounting gasket is the seal between the air conditioner and the enclosure. Avoid dragging the air conditioner on the enclosure with the mounting gasket attached as this could cause rips or tears in the gasket and risk losing the water tight seal.
4. To avoid cross-threading mounting inserts, start bolts by hand before tightening with a wrench or ratchet driver.
5. Allow unit to remain upright for a minimum of five (5) minutes before starting. CAUTION! Air conditioner must be in upright position during operation.
6. Refer to the nameplate for electrical requirements. Wire the unit to a properly grounded power supply. The unit's terminal block is located behind the evaporator access panel on the rear (enclosure side) of the unit. For 3 phase units, once power is applied, verify that phase monitor light is illuminated which indicates correct electrical phasing. Electrical circuit should be fused with slow blow or HACR circuit breaker.
7. Set controller setpoints for required cabinet temperature. Refer to DISPLAYING AND CHANGING PROGRAM Settings on page 15 for setpoint adjustment and operation

© 2022 nVent

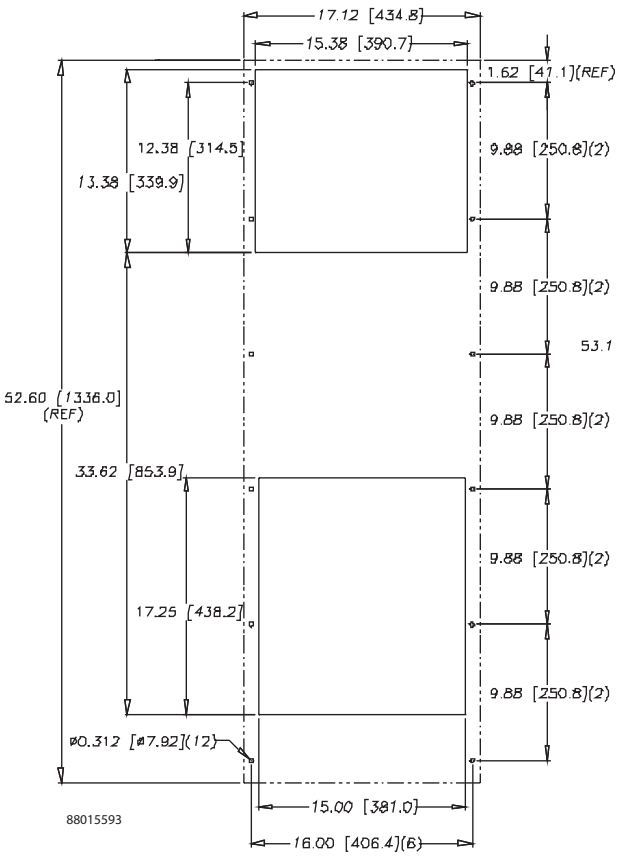

Surface Mount

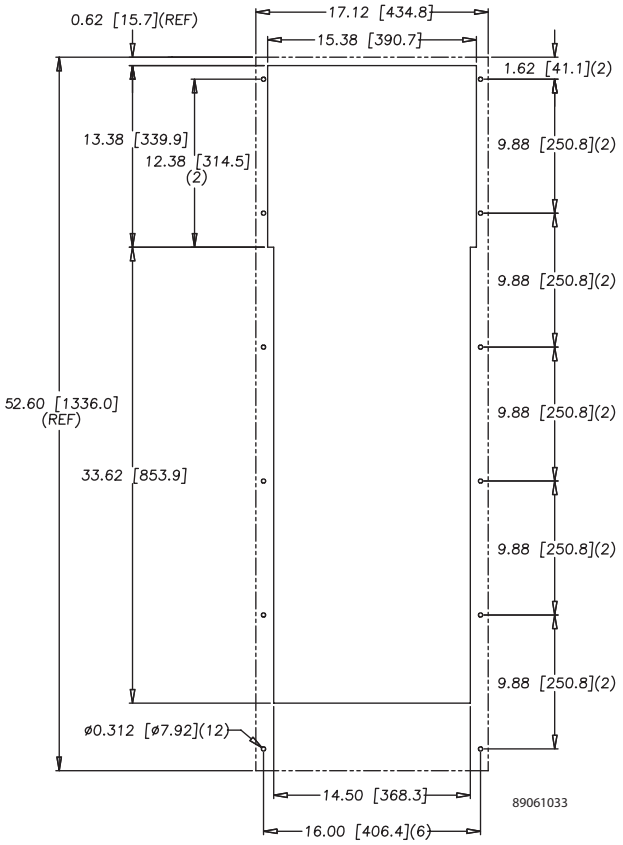

Surface Mount With Heat

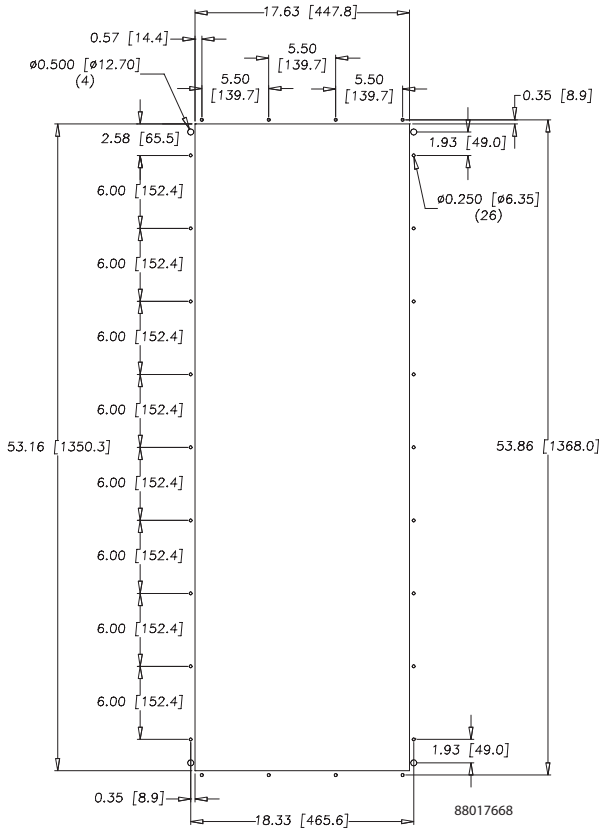

Partial Recess Mount

Figure 1
Cutout Dimensions

© 2022 nVent

DIMENSIONAL DRAWINGS

8000 BTU/HR. WITH THERMOSTATS

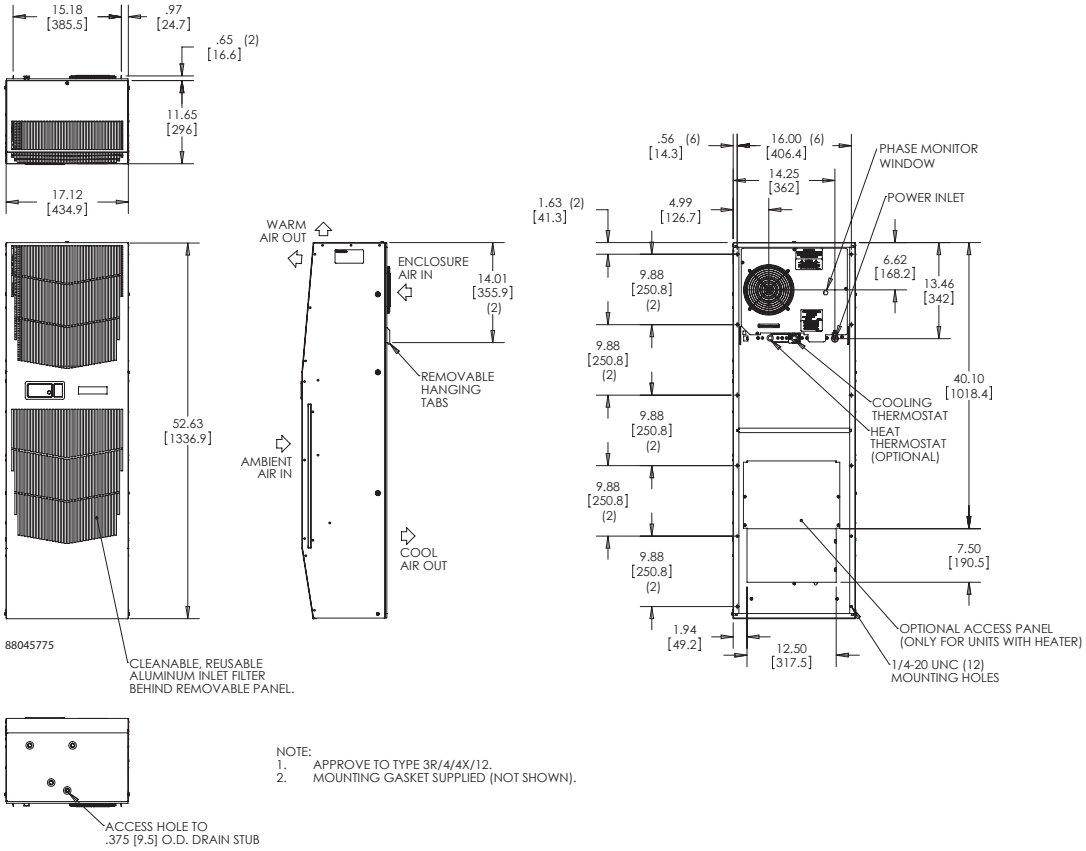

NOTE:
1. APPROVE TO TYPE 3R/4/4X/12.
2. MOUNTING GASKET SUPPLIED (NOT SHOWN).

12000 BTU/HR. WITH THERMOSTATS

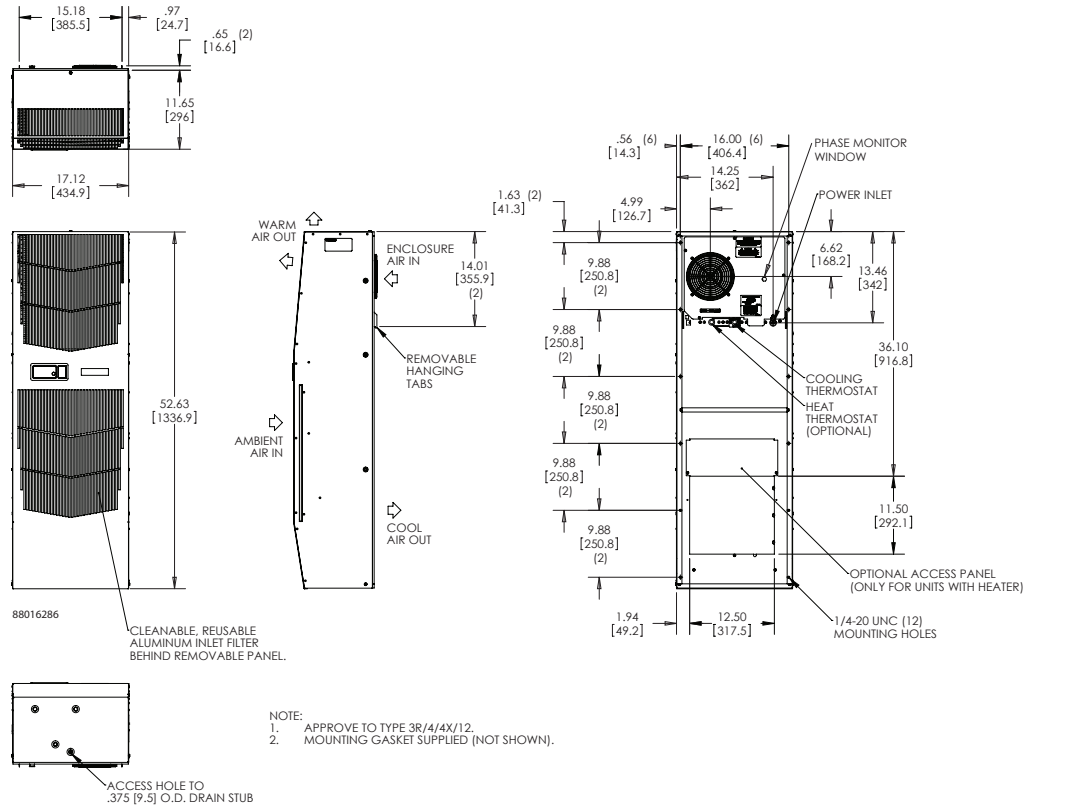

NOTE:
1. APPROVE TO TYPE 3R/4/4X/12.
2. MOUNTING GASKET SUPPLIED (NOT SHOWN).

© 2022 nVent

8000 BTU/HR. WITH THERMOSTATS AND HEAT

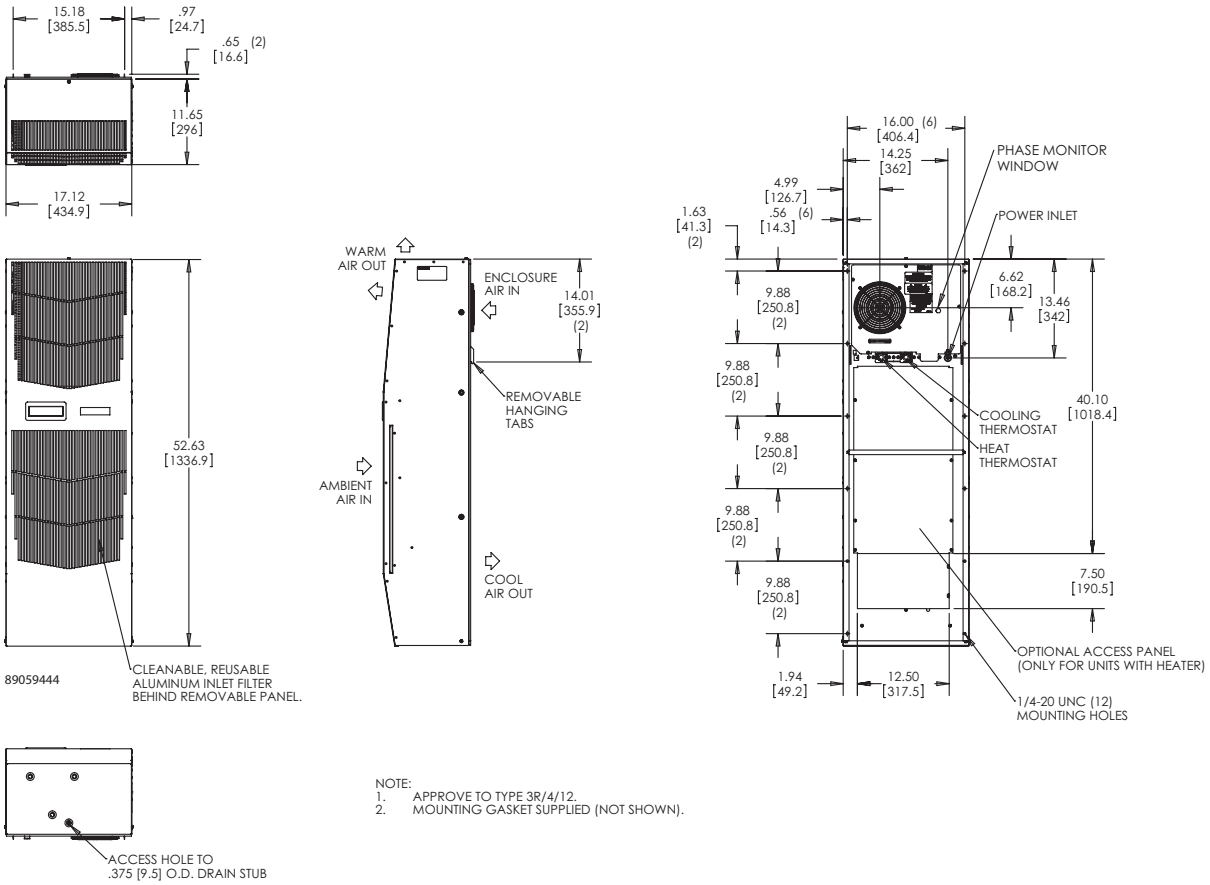

NOTE:
1. APPROVE TO TYPE 3R/4/12.
2. MOUNTING GASKET SUPPLIED (NOT SHOWN).

12000 BTU/HR. WITH THERMOSTATS AND HEAT

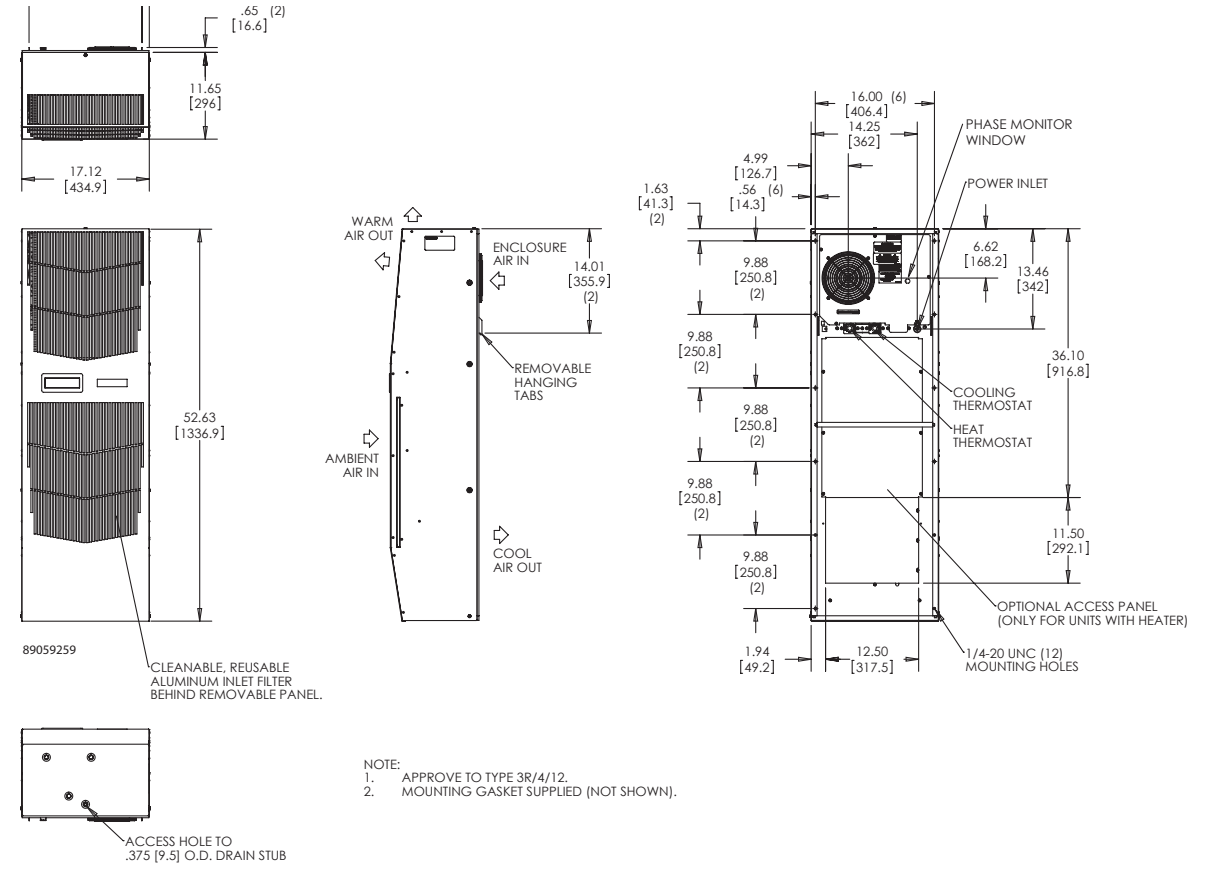

NOTE:
1. APPROVE TO TYPE 3R/4/12.
2. MOUNTING GASKET SUPPLIED (NOT SHOWN).

© 2022 nVent

DIGITAL THERMOSTAT CONTROLLER (OPTIONAL)

OVERVIEW

The digital thermostat (controller) is a parametric controller for the complete management of air conditioners. All settings are pre-programmed at the factory. Cooling/heating setpoint, cooling/heating differential and high/low temperature setpoint are designed to be adjustable by the operator. All alarms are outputted through the alarm relay. In addition, if Hoffman network card (Remote Access Control (RAC) Module) is used the parameters that state above and alarms are accessible remotely through Ethernet connection utilizing SNMP, Modbus TCP, EtherNet/IP, and Profinet protocol . A USB connection from the network card is also provided with accessibility to the digital thermostat controller utilizing Modbus RTU and RS-845 serial bus. In addition, the USB connection is also used to read the network information from the Hoffman network card and temperature setpoints and alarm from the controller. Note that Hoffman network card (RAC module) is acting as a gateway to the digital thermostat where temperature setpoints and alarm can be viewed and/or changed remotely.

Note: nVent Hoffman network card (RAC module) is an optional accessory, therefore, some of the air conditioners ship without the network card but it is upgradable upon request.

ENERGIZING THE CONTROLLER

The digital controller is wired and programmed at the factory to operate when power is applied to the air conditioner. In normal condition, the evap fan starts operating after the completion of the self-evaluation which is less than 30 seconds and fan icon should be illuminated along with the inlet and outlet temperature data (if an option outlet temperature sensor is installed).

CONTROL STATUS INDICATION

The display has numerous symbols to indicate the various controller functions such as cooling, heating, alarming, evaporator fan, and heating. Indicators (icons) are steady illuminated on screen when active.

Figure 2
Display

© 2022 nVent

KEYPAD

SYMBOL	COLOR	ICON INDICATION	ICON STATUS
	Red	Alarm - active when alarm is detected	Flashing when alarm is detected
	White	Keypad **Select** – access to passcode , hold 5 sec to turn unit ON/OFF, parameter menu, parameter setting, write or save to EEPROM, and hold for 3sec to return to main screen	ON
	White	Keypad **Up** – navigate to previous parameter and increasing parameter variable	ON only when reviewing parameters
	White	Keypad **Down** – navigate to next parameter and decreasing parameter variable, all inputs, unit status.	ON

MAIN FIELD

SYMBOL	COLOR	ICON INDICATION	ICON STATUS
°C	White	When operating temperature in degrees Celsius	ON
°F	White	When operating temperature in degrees of Fahrenheit	ON
Main Field Line 1	White	Display inlet temperature	ON
Main Field Line 2	Orange	1. Display outlet temperature in standalone mode if outlet sensor is present 2. Displays device ID for primary-secondary mode up to 10 units, 1:10 … 10:10 or lead-lag mode up to 2 units, 1:2… 2:2	ON

ICONS

SYMBOL	COLOR	ICON INDICATION	ICON STATUS
	White	Compressor Running	• Flashing while waiting for compressor to turn ON • Steady ON while compressor is running
	White	Evaporator Running	ON
	White	Electric heater ON	ON
	White	Primary and/or lead controller	ON
	White	Freeze control	Compressor and Condenser fan OFF while illuminated
	White	Power ON	ON

© 2022 nVent

Home Screen
Inlet Temp
Outlet Temp
Evap fan icon
Compressor icon
Heater icon
Unit of measure
Power ON icon
Program
Read ID & Sensor
S1 Inlet Sensor
S2 Outlet Sensor
ESC Escape

Passcode Screen	
PSd	0002 or 0022
ESC	Escape

Passcode 0002	
ALrF	Alarm Folder
AHiF	Alarm History Folder
PArF	Parameter Folder
rtCL	Real Time Clock Folder
rStF	Reset
UnF	Unit of Measure (°C or °F)
FrF	Firmware Revision Folder
LOG Out	Log Out of program mode

ArOP	Alarm Relay Output Setting
dO	Door Open Alarm Setting
Ht	High temperature alarm setpoint
Lt	Low temperature alarm setpoint
rH	Relative Humidity alarm setpoint
ESC	Escape

CSt	Cooling Setpoint
Cd	Cooling Differential
Cd2	Cooling Differential 2
HSt	Heating Setpoint
Hd	Heating Differential
H25	Internal Buzzer Configuration
ESC	Escape

t01	Unit of hour
t02	Unit of minute
t03	Unit of year
t04	Unit of month
t05	Unit of day
SET	Save
ESC	Escape

rSAL	Reset or Clear alarms
rSPA	Reset parameters to default
ESC	Escape

H13	°C = 0; °F = 1
ESC	Escape

Fr	Firmware revision
ESC	Escape

© 2022 nVent

DISPLAYING AND CHANGING PROGRAM SETTINGS

TO VIEW OR ACCESS THE SETTINGS

TO ACCESS FOLDER MENUS:

1. Press button to display passcode screen, the screen displays **PSd** on line 1 and **0000** on line 2.
2. Press button to access to passcode , the first digit of **0000** is flashing and press 3 more times until the last digit of **0000** flashes.
3. Press arrow two times to change the 0 to 2. Press for access to folder menus.

   Note: to exit the security level to the main screen wait one minute with no action or Press arrow until **LOG Out** message displays, then press button.

TO CHANGE A PARAMETER SETTING

1. Once in the folder menu navigate to the desired setting to be changed using the arrow to scroll and button to access a menu or parameter.
2. To change a parameter Press button and parameter value will begin to flash.
3. Press / arrow to the desire value.
4. Press button to save the setting and the screen will revert to the parameter mnemonic.

   Note: if button is not pressed, the new setpoint is not saved.

   To exit the parameter settings to the main screen wait one minute with no action or Press arrow few times until **ESC** displays, then press button to return to **UoF** screen. From the **UoF** screen Press arrow few times until **LOG Out** message displays, then press button to return to the main screen.

   Selecting ESC returns to folder menu.

   Selecting LOG out returns to main screen.

HEAT/COOL OPERATING PARAMETERS

Mnemonic Parameter	Description	Default Value	Range
CSt[1]	Cooling setpoint	80 F	72 F to 120 F
Cd (Cd1)[1]	Cooling differential	7 F	2 F to 25 F
Cd2[4]	Cooling differential 2	15 F	
HSt[2 3]	Heating setpoint	50 F	45 F to 60 F
Hd[3]	Heating differential	7 F	2 F to 25 F

1 Compressor or cooling turns ON at CSt + Cd and OFF at CSt

2 Heater or heating turns ON at HSt and OFF at HSt + Hd

3 Heating mode is only applied to a unit with heater option

4 Cooling differential 2 is only applied to 2-stage compressor and lead-lag application

ALARM PARAMETERS

Mnemonic Para	Description	Default value
Ht	High temperature alarm setpoint	125 F
Lt	Low temperature alarm setpoint	40 F
dO	Door open alarm setting	NC
ArOP	Alarm relay output	NO

NOTES: (4) The alarm relay output logic is designed to be configurable

© 2022 nVent

VIEW ALARMS

Alarms may be viewed when the alerting icon ⚠ is flashing.

1. On the main screen, press the alerting icon ⚠ button
2. The screen displays the most recent or newest alarm where the alarm code display on line 1 and the alerting icon ⚠ is now in steady
3. Press ↑ arrow to view next alarm if there are more than one
4. Press ↓ arrow to display **ESC**, then press ◎ button to return to the main screen

VIEW THE ALARMS IN THE ALARM HISTORY FOLDER

1. Follow instructions above to enter the passcode and open the alarm history folder **(AHiF)**.
2. Press ◎ button to access to the alarm history.
3. Press ↓ arrow to display the mnemonic alarm on line 1 and time, month, and day display on line 2. For example, low temp alarm **(Lt)** displays on line 1 and 09:24 and 0706 display on line 2 in sequence. Note that the time, and date recorded in the alarm history is based on the local real-time-clock if configured after installation.
4. Press ↓ arrow to view next alarm. The controller is able to retain up to 25 events
5. Press ↑ ↓ arrow until the screen displays **ESC**, then press ◎ button to return to the main screen or if no action for longer than 60 seconds the screen will be automatically revert to the main screen.

   NOTE: if no alarms are present then only **ESC** will be displayed in the folder.

   There are seven possible alarms (non-latching) detectable by the controller and are indicated on the controller display. All alarms are accessible locally. If a Hoffman network card (RAC module) is used, alarms are also accessible remotely through the Ethernet and USB connection.

Mnemonic Alarm	Description	Cause	Result	Alarm Relay Output
dO	Door open alarm	Enclosure door opens or not properly close	Compressor and evap fan turn OFF in duration of alarm	Closed
S1F	Inlet temperature sensor fault	Inlet temp probe failed	No effect on function, controller continue operating as normal using outlet sensor with setpoint of 50 F	Closed
S2F	Outlet temperature sensor fault	Outlet temp probe failed	No effect on function but loss freeze protection	Closed
LA	Malfunction alarm	MALF high pressure switch opens	No effect on function	Closed
Ht	High temp warning	Enclosure air exceeds high temp alarm setpoint	No effect on function	Closed
Lt	Low temp warning	Enclosure air drops below low temp alarm setpoint	No effect on function	-
FA	Frost alarm	Evaporator coil freezes	Compressor and condenser fan turns OFF for the duration of alarm. Alarm clears when the outlet temperature sensor reaches 59 F	Closed

© 2022 nVent

TO RESET THE ALARMS IN ALARM HISTORY FOLDER

The controller is designed with ability to reset or clear the alarm history

1. Follow instructions above to enter the passcode and open the reset folder **(rStF)**.
2. The screen displays **rSAL** on line 2 and **nO** on line 1, press button the **nO** is flashing
3. Press arrow to change **nO** to **YeS**, then press button reset the alarms. The screen flashes once and returns to **rSAL** with **nO** one line 2
4. Press arrow to navigate to **ESC**, then press to returns to **rStF** screen.
5. Press arrow to navigate to **LOG Out**, then press button to return to the main screen or if no action for longer than 60 seconds the screen will be automatically reverted to the main screen.

TO RESET PARAMETERS TO FACTORY DEFAULT

This option is ONLY applied if the operator wants to reset all control parameters back to factory default.

1. Follow instructions above to enter the passcode and open the reset folder (rStF).
2. The screen displays rSAL, press arrow to navigate to rSPA and then press button
3. The screen displays rSPA one line 1 and the word nO on line 2 in steady state, press button and then the word nO is flashing and ready to change
4. Press arrow to change nO to YES. Press button the screen displays PSd with 0000 on line 2
5. Press button to enter to passcode. Press button few times until the last digit of 0000 flashing
6. Press arrow to change 0 to 2, press button to authorize the reset of the parameters
7. The screen returns to rSPA screen in steady state.
8. Press arrow to navigate to ESC, then press to returns to rStF screen.
9. Press arrow to navigate to LOG Out, then press button to return to the main screen or if no action for longer than 60 seconds the screen will be automatically reverted to the main screen.

DISPLAYING TEMPERATURE DATA ON SCREEN

There are two temperature probes in the air conditioner where one is reading the enclosure air temperature incoming to the air conditioner and other is reading the cooled air leaving the air conditioner and entering the enclosure. Both temperature data are displayed on the screen where line 1 is the reading of the inlet temperature and line 2 is the reading of the outlet temperature.

COMPRESSOR RESTART TIME DELAY

A factory set 3 minute (180 seconds) restart delay exists to reduce residual back pressure before allowing the compressor to restart. The compressor will stay off for the entire restart duration after the compressor is disabled. A flashing compressor icon on the display indicating that the unit is in a compressor restart delay mode while calling for cooling or waiting for compressor to turn ON.

ALARM OUTPUT CONTACT

The digital controller has a normally open dry contact alarm output with a resistive load rating of 250VAC @ 5 amps max. The two yellow 18 AWG wires located at the back of the air conditioner provide a connection to this output. **Note: do not apply power to this normally open dry contact (two yellow 18 AWG wire)**. This alarm relay output is configurable and provides user with the ability to change the configuration to support their external device. Parameter C21 controls the alarm relay output logic and can be accessed through security code “0022” in the PArF folder.

Para	Description	Configuration
C21	Alarm relay output logic	0 = normally open (NO) – factory default 1 = normally closed (NC)

ALARM INPUT CONNECTION

The digital controller can accept a dry contact/switch input via the two 18 AWG white wires located at the back of the air conditioner. This input is associated with the controller display alarm mnemonic dO (door open). To use this feature, remove the splice connector, and connect the two white wires to customer supplied enclosure door switch in its place. **Note: do NOT apply power to this dry contact input**.

© 2022 nVent

PRIMARY-SECONDARY (PS) MODE

Note: during normal operation, in both the primary-secondary (PS) and lead-lag (LL) operating modes, line 2 displays the device ID, not the outlet temperature. The outlet temperature can be viewed on line 1 by pressing ↓ arrow.

Primary-secondary (PS) mode shares the same hardware and source code as standalone mode, but offers more functionality and features. The controller ships from the factory in Standalone Mode. PS mode is configured manually in the field after the installation. This option allows the user to operate the air conditioner in a group network with up to 10 units. To support PS mode, three parameters, **H01**, **H02**, and **H03** need to be configured. **H01** specifies the operating mode, **H02** specifies the device ID, and **H03** specifies the total number of the units in the group network.

Before configuring to operate in PS mode, the user should understand the functionality of the PS mode.

1. In the PS mode, all units operate off the cooling/heating setpoint and differential of the primary unit. The system prevents setpoint changes from secondary units.
2. The primary unit monitors the enclosure temperatures of all the units and manages the ON/OFF status of cooling and heating based on the unit reporting the highest temperature.
3. When cooling is initiated the primary unit energizes first. Secondary units are energized sequentially at 10 second intervals. When heating is initiated all units turn on heat together. When cooling or heating is satisfied all units turn off together.
4. If the number of units communicating on the network doesn't match the value in H03 then the primary unit will display alarm LC, and the secondary units will display alarm LC1 until the communication re-established.
5. Any unit that loses communication with the primary unit will enter standalone mode and continue operating based on its own temperature probe until communication is re-established.
6. All temperature setpoints and alarms can be viewed remotely if one of the ACUs is equipped with Hoffman network card (RAC module).
7. Best recommendation is to configure the ACU that has Hoffman network card to be the primary one.

CONNECTING UNITS TOGETHER IN PRIMARY/SECONDARY MODE

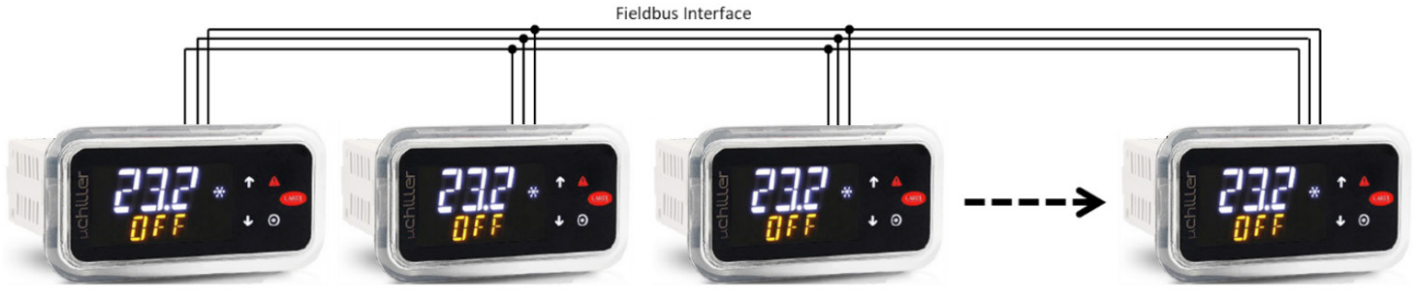

Primary - Device ID 1 | Secondary - Device ID 2 | Secondary - Device ID 3 | Secondary - Device ID 10

Figure 3
Primary-secondary network connectivity

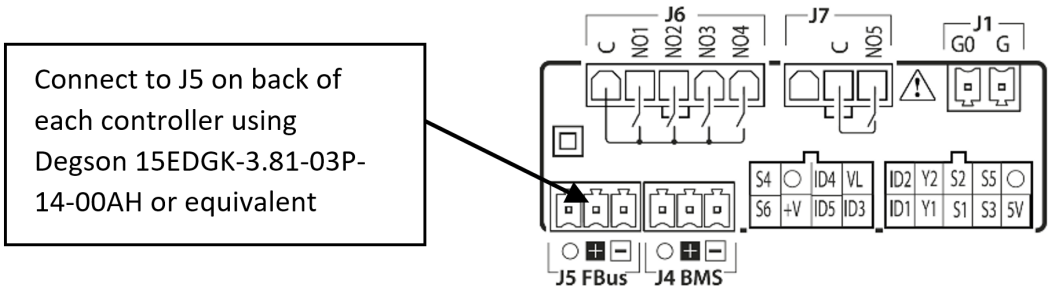

© 2022 nVent

TO CONFIGURE THE CONTROLLER FROM SINGLE MODE TO PS MODE, SIMPLY FOLLOW BELOW PROCEDURES

1. Before proceeding the PS mode configuration for each controller, make sure that the communication cable is connected from one ACU to another using a shielded cable with the shield grounded.
2. Press button to display passcode screen, the screen displays **PSd** on line 1 and **0000** on line 2.
3. Press button to access to passcode , the first digit of 0**000** is flashing and press 2 more times until the third digit 00**0**0 flashes. Press arrow two times to change **0** to **2**, then press button to move to the last digit **002**0
4. Press arrow two times to change the 0 to 2.
5. Press button to access to folder menu and then, the screen displays **ALrF**
6. Press arrow to navigate to **PArF**, then press button to access to parameter menu
7. The screen displays **C**, press arrow to navigate to parameter **H** and then, press button to access to parameter **H** menu

Parameter	Description	Available Range	PS Settings	Default
H01	Mode	SA (stand alone)	PS (primary-secondary)	SA
		PS (primary-secondary)		
		LL (lead-lag)		
H02	Device ID	1 up to 10	1 up to H03	1
H03	Total number of the units in the group network	1 up to 10	2 up to 10	1

8. Set parameter **H01** to **PS** (primary-secondary).

   Note that after **H01** = **PS**, the snowflake icon is illuminated and line 2 changes its display information from outlet temperature to device ID, for example, line 2 displays **01:02** where 01 indicates controller #1 and 02 indicates the total number of the controllers in a group network. Keep in mind that the snowflake icon only illuminates on primary controller.
9. Set parameter **H02** (device ID) to 1 to 10. This device ID will be different for each controller that is connected. The controller set to 1 will be the primary controller. Use numbers sequentially and don't skip using a number.
10. Set parameter **H03** (total number of controllers connected) to 1 to 10.

CONNECTING UNITS TOGETHER IN LEAD/LAG MODE

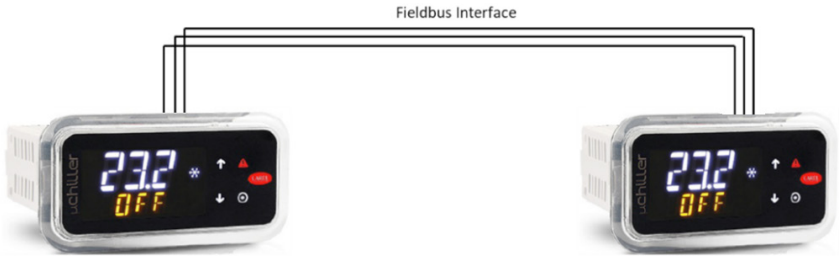

Lead - Device ID 1

Lag - Device ID 2

Figure 4
Lead-Lag network connectivity

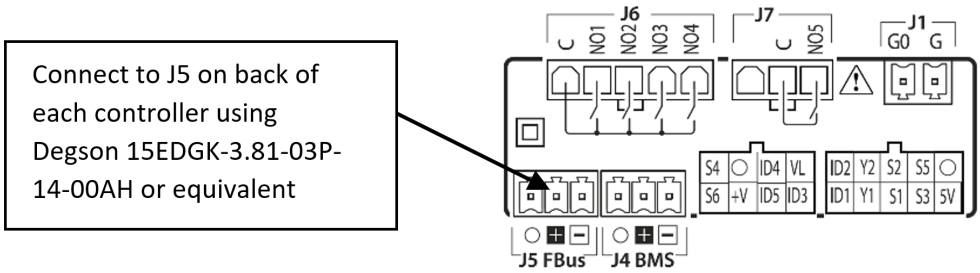

© 2022 nVent

TO CONFIGURE THE CONTROLLER FROM SINGLE MODE TO LL MODE, SIMPLY FOLLOW BELOW PROCEDURES. PERFORM THIS CONFIGURATION FOR BOTH AIR CONDITIONERS.

1. Before proceeding the LL mode configuration for each controller, make sure that the communication cable is connected from one ACU to another using a shielded cable with the shield grounded.
2. Press button to display passcode screen, the screen displays **PSd** on line 1 and **0000** on line 2.
3. Press button to access to passcode, the first digit of 0**000** is flashing and press 2 more times until the third digit **00**0**0** flashes. Press arrow two times to change **0** to **2**, then press button to move to the last digit **002**0.
4. Press arrow two times to change the 0 to 2.
5. Press button to access to folder menu and then, the screen displays **ALrF**.
6. Press arrow to navigate to **PArF**, then press button to access to parameter menu.
7. The screen displays **C**, press arrow to navigate to parameter **H** and then, press button to access to parameter **H** menu.

Parameter	Description	Available Range	LL Settings	Default
H01	Mode	SA (stand alone) PS (primary-secondary) LL (lead-lag)	LL (lead-lag)	SA
H02	Device ID	1 up to 10	1 or 2	1
H03	Total number of the units in the group network	1 up to 10	2	1
H14	LL strategy selection	0-250	0 (Alternate each cycle) 1-250 (Alternate hours)	0

8. Set parameter **H01** to **LL** (lead-lag).
9. Set parameter **H02** (device ID) to 1 for one unit and 2 for the other unit.
10. Set parameter **H03** (total number of controllers connected) to 2.
11. Set parameter H14 (LL strategy selection) to 0 to 250. This is the run time in hours before ACU1 and ACU2 will alternate being the lead unit. When set to zero ACU1 and ACU2 will automatically alternate every cycle.

AIR CONDITIONER UNIT REMOTE COMMUNICATION FEATURES

Air conditioners that include the optional Hoffman network card (RAC module) have remote communication capabilities utilizing SNMP, Modbus TCP, EtherNet/IP, Profinet Protocol via Ethernet connection, and Modbus RTU protocol via USB connection. nVent provides Windows interface application software that is available to download free from nVent support link https://go.nvent.com/remote-access-control-support-center. The Windows interface application software supports both Ethernet and USB communication.

USB COMMUNICATION

This communication mode allows direct connection from a laptop (or PC) to the air conditioning unit using a Mini-b USB cable. As stated above, Modbus RTU is used to communicate between the two devices via USB connection.

ETHERNET COMMUNICATION

This communication mode allows remote connection to the air conditioning unit utilizing SNMP, Modbus TCP, EtherNet/IP, and Profinet protocol. Customers that use their own software can download an MIB file for SNMP, EDS or EtherNet/IP Object file for EtherNet/IP, Coil Register file for Modbus TCP, and Data Point for Profinet.

Note: the Ethernet card (RAC module) has a default IP Address of 192.168.1.2

Both Ethernet and USB communication allow the ability to:

- Read ACU inlet and outlet air temperature
- Read and change cooling and cooling differential setpoints
- Read and change heating and heating differential setpoints
- Read and change the high and low temperature alarm settings
- Read and change the Gateway IP address, Device IP address, Subnet MASK, Trap IP address, and community string
- Read and change unit identification

© 2022 nVent

- Read and change the state of IP address from static to dynamic or vice versa
- Read and change the air temperature unit of measure (from F to C or vice versa)
- Read current alarm status
- Evaporator fan control setting
- Read and change the control of door open switch

SOFTWARE AND CONFIGURATION FILE DOWNLOADS

As stated above, the PC interface tool, MIB file, EDS and EtherNet_IP Object file, Coil Register file, and Data Point file can be downloaded from remote access control support center link, https://go.nvent.com/remote-access-control-support-center.

USING HOFFMAN PC INTERFACE TOOL

Hoffman PC Interface Tool gives the user the ability to communicate with Hoffman air conditioning unit as to read and write air temperature data, high and low temperature alarm setting, active alarms, and other information from the controller remotely using either Ethernet or USB connection. With Hoffman PC Interface Tool a user has the ability to remotely manage and monitor hundreds of Hoffman air conditioners both domestically and globally at one central location at user's own pace, so long as all air conditioners are configured in the same subnet in the network. Hoffman PC Interface Tool also supports text message and email alerting to a service technician when an alarm occurs. In addition, the tool also provides data logging capability for data analysis.

USB COMMUNICATION MODE

NOTE: before connecting the unit to the PC, make note of Comm Ports present. After the unit is connected to the PC, a new Comm Port will be added to the list. Recommend using the new Comm Port.

- In the Hoffman A.C. Monitor main screen, click on **Tools** and uncheck **Use Ethernet**
- Click on **Tools** menu again, the **Comm Port** menu is now enabled
- Put the mouser icon to the **Comm Port** and to the right there is small box with dropdown arrow
- Click on the dropdown arrow next to the small box to view the list of the Comm Port
- Write down the list of the Comm Port
- Connect the Mini-b USB cable from the PC or laptop to the A/C unit
- Click on **Tools** menu and point the mouser icon to the **Comm Port**, the small box with dropdown arrow presents to the right
- Click on the dropdown arrow and select the newest or higher number of the Comm Port

TO VIEW THE CONTROLLER DATA INFORMATION FROM THE A/C UNIT

- In the Hoffman A.C. Monitor main screen, select **Single ACU Monitor** tab.
- Click on **Enable Comm** button, then the screen will be displayed the enclosure air temperature and other temperature settings information include the unit of measure.
- The **Enable Comm** text on the button now changes to **Disable Comm**.
- To stop the communication, click on the **Disable Comm** button and it will change to Enable Comm.

TO CHANGE THE TEMPERATURE SETTINGS TO THE CONTROLLER

- In the Hoffman A.C. Monitor main screen, select **Single ACU Settings** tab.
- Note: the **Change Settings** button is disable and all settings are grayed out. Click on **Read Settings** button, all settings are now displayed on screen and the **Change Settings** button is now enable.
- To change any of the temperature setting, Unit ID, or Station Name, simply click up/down arrow on right of the box or highlight the current value and type the new value in the box.
- Check the box on the left, then click on **Change Setting** buttons to save the new setpoint.
- Click on **Read Settings** again to verify the new setpoint.
- Select **Single ACU Monitor** tab and click on **Enable Comm** to read the new temperature settings from the controller.
- Each of the setpoint should match the new variables that just entered from the **Single ACU Settings** tab.

TO VIEW AND CHANGE THE ETHERNET CARD (RAC) INFORMATION

- In the Hoffman A.C. Monitor main screen, select **Single ACU Ethernet Info** tab and notice that the **Reprogram ACU** button is disabled.
- Click on **Read Ethernet Info** button, the Ethernet information will be displayed and the **Reprogram ACU** button is enable.
- To change the Ethernet configuration such as Device IP Address, Gateway IP, and Trap IP, make sure to change the **Community** string to **private** from **public**. Note that case is very sensitive. The wording must be lower case only.
- Enter the new network configuration to Device IP address, Gateway IP, and Trap IP, then click on **Reprogram ACU** button to write to the network card.
- In order to be recognized the new networking configurations in local network, cycle power to the A/C unit is required.

© 2022 nVent

TO CHANGE THE STATIC NETWORK TO DYNAMIC NETWORK MODE

- In the **Single ACU Ethernet** Info tab screen, click on **Read Ethernet Info** button to read the network card information.

  Note: the **Reprogram ACU** button is now enable.
- Check the box next to the **Use DHCP Server** on the upper left corner of the screen.
- Click on **Reprogram ACU** button. Now the network is switched to dynamic from static mode.
- To change the dynamic mode to static mode, in the **Single ACU Ethernet Info** tab window click on **Read Ethernet Info** button.
- Uncheck the box next to the **Use DHCP Server** on the upper left corner of the screen.
- Click on **Reprogram ACU** button to switch to static mode.

USB COMMUNICATION MODE

NOTE: before connecting the unit to the PC, make note of Comm Ports present. After the unit is connected to the PC, a new Comm Port will be added to the list. Recommend using the new Comm Port.

- In the Hoffman A.C. Monitor main screen, click on **Tools** and uncheck **Use Ethernet**.
- Click on **Tools** menu again, the **Comm Port** menu is now enabled.
- Put the mouser icon to the **Comm Port** and to the right there is small box with dropdown arrow.
- Click on the dropdown arrow next to the small box to view the list of the Comm Port.
- Write down the list of the Comm Port.
- Connect the Mini-b USB cable from the PC or laptop to the A/C unit.
- Click on **Tools** menu and point the mouser icon to the **Comm Port**, the small box with dropdown arrow presents to the right.
- Click on the dropdown arrow and select the newest or higher number of the Comm Port.

TO VIEW THE CONTROLLER DATA INFORMATION FROM THE A/C UNIT

- In the Hoffman A.C. Monitor main screen, select **Single ACU Monitor** tab.
- Click on **Enable Comm** button, then the screen will be displayed the enclosure air temperature and other temperature settings information include the unit of measure.
- The **Enable Comm** text on the button now changes to Disable Comm.
- To stop the communication, click on the **Disable Comm** button and it will change to Enable Comm.

TO CHANGE THE TEMPERATURE SETTINGS TO THE CONTROLLER

- In the Hoffman A.C. Monitor main screen, select **Single ACU Settings** tab.
- Note that the **Change Settings** button is disable and all settings are grayed out. Click on **Read Settings** button, all settings are now displayed on screen and the **Change Settings** button is now enable.
- To change any of the temperature setting, Unit ID, or Station Name, simply click up/down arrow on right of the box or highlight the current value and type the new value in the box.
- Check the box on the left, then click on **Change Setting** buttons to save the new setpoint.
- Click on **Read Settings** again to verify the new setpoint.
- Select **Single ACU Monitor** tab and click on **Enable Comm** to read the new temperature settings from the controller.
- Each of the setpoint should match the new variables that just entered from the **Single ACU Settings** tab.

TO VIEW AND CHANGE THE ETHERNET CARD (RAC) INFORMATION

- In the Hoffman A.C. Monitor main screen, select **Single ACU Ethernet Info** tab and notice that the **Reprogram ACU** button is disabled.
- Click on **Read Ethernet Info** button, the Ethernet information will be displayed and the **Reprogram ACU** button is enable.
- To change the Ethernet configuration such as Device IP Address, Gateway IP, and Trap IP, make sure to change the **Community** string to **private** from **public**. Note that case is very sensitive. The wording must be lower case only.
- Enter the new network configuration to Device IP address, Gateway IP, and Trap IP, then click on **Reprogram ACU** button to write to the network card.
- In order to be recognized the new networking configurations in local network, cycle power to the A/C unit is required.

© 2022 nVent

TO CHANGE THE STATIC NETWORK TO DYNAMIC NETWORK MODE

- In the **Single ACU Ethernet Info** tab screen, click on **Read Ethernet Info** button to read the network card information.

  Note: the **Reprogram ACU** button is now enable.
- Check the box next to the **Use DHCP Server** on the upper left corner of the screen.
- Click on **Reprogram ACU** button. Now the network is switched to dynamic from static mode.
- To change the dynamic mode to static mode, in the **Single ACU Ethernet Info** tab window click on **Read Ethernet** Info button.
- Uncheck the box next to the **Use DHCP Server** on the upper left corner of the screen.
- Click on **Reprogram ACU** button to switch to static mode.

ETHERNET COMMUNICATION MODE

- In the Hoffman A.C. Monitor screen, click on **Tools** on the main menu.
- In the dropdown window, check the **Use Ethernet** and notice that **Comm Port** is now disabled.
- Select **Single ACU Monitor** tab, in the window click on the **Device IP** box and type the IP address that need to communicate to the network card.
- Click on the **Community** box and then type the word **private**.

  Note: there are two community strings where one is for read ONLY and one is for read/write. The word "public" allows to read ONLY and "private" allows to read and write.

- Click on **Enable Comm** button to communicate to the network card and read the temperature information from the controller.
- Now the temperature settings information in the controller present on the screen.
- To view and change the temperature setpoints, Ethernet card configurations, static and dynamic networking mode, simply follow the same procedures that define for the USB communication mode above.

TO MONITOR MULTIPLE A/C UNITS IN THE NETWORK

With the Ethernet networking mode, it provides user with the ability to manage and monitor hundreds of the A/C units from distance domestically and globally at one central location as long as all A/C units configure in the same subnet in the network. Refer to remote access control (RAC) Instruction Manual for configuring multiple units and with text message and email capability in Hoffman A.C. Monitor software. The remote access control Instruction Manual, P/N: 89091002 can be downloaded from nVent support center link, https://go.nvent.com/remote-access-control-support-center.

ALARM LOG ACCESSIBLE WITH SUPPORT PROTOCOL

- Using custom software with below supporting file gives the user the ability to view a log of the last 25 alarms
  - MIB file for SNMP protocol
  - Register and Coil file for Modbus TCP protocol
  - EDS and/or EtherNet_IP Objects file for EtherNet/IP protocol
  - Profinet Data Point file for Profinet protocol

© 2022 nVent

REMOTE ACCESS CONTROL PIN-OUT

	FUNCTION	NAME	PIN#	WIRE#
J6	RETURN	C	1	BLK75
	ENCL MI	NO1	2	BLK77
	COOL	NO2	3	ORG78
	NA	N03	4	-
	HEAT	NO4	5	BRN76
J7	RETURN	C	2	YEL39
	ALAR RELAY OUTPUT	NO5	3	YEL38
J1	GROUND	G0	1	BLK40
	POWER (24VAC)	G	2	WHT41
J2	NA	5V	1	-
	NA	S3	2	-
	INLET TEMP PROBE	S1	3	RED
	NA	Y1	4	-
	DOOR OPEN SWITCH	ID1	5	WHT63
	GROUND	O	6	WHT
	RESERVED	S5	7	-
	OUTLET TEMP PROBE	S2	8	RED45
	NA	Y2	9	-
	MAL-FUNCTION ALARM	ID2	10	BLU88
J3	RESERVED	ID3	1	-
	UNIT REMOTE ON/OFF	ID5	2	-
	NA	+V	3	-
	RESERVED	S6	4	-
	NA	VL	5	-
	RESERVED	ID4	6	-
	GROUND	O	7	-
	RESERVED	S4	8	-
J4	DATA (-)	-	1	BLK
	DATA (+)	+	2	RED
	GROUND	O	3	WHT
J5	DATA (-)	-	1	-
	DATA (+)	-	2	-
	GROUND	O	3	-

© 2022 nVent

SCHEMATIC AND WIRING DIAGRAM FOR REMOTE ACCESS CONTROL

G52 GENERIC SCHEMATIC WITH REMOTE ACCESS CONTROL (ACTUAL UNIT OPTIONS MAY VARY)

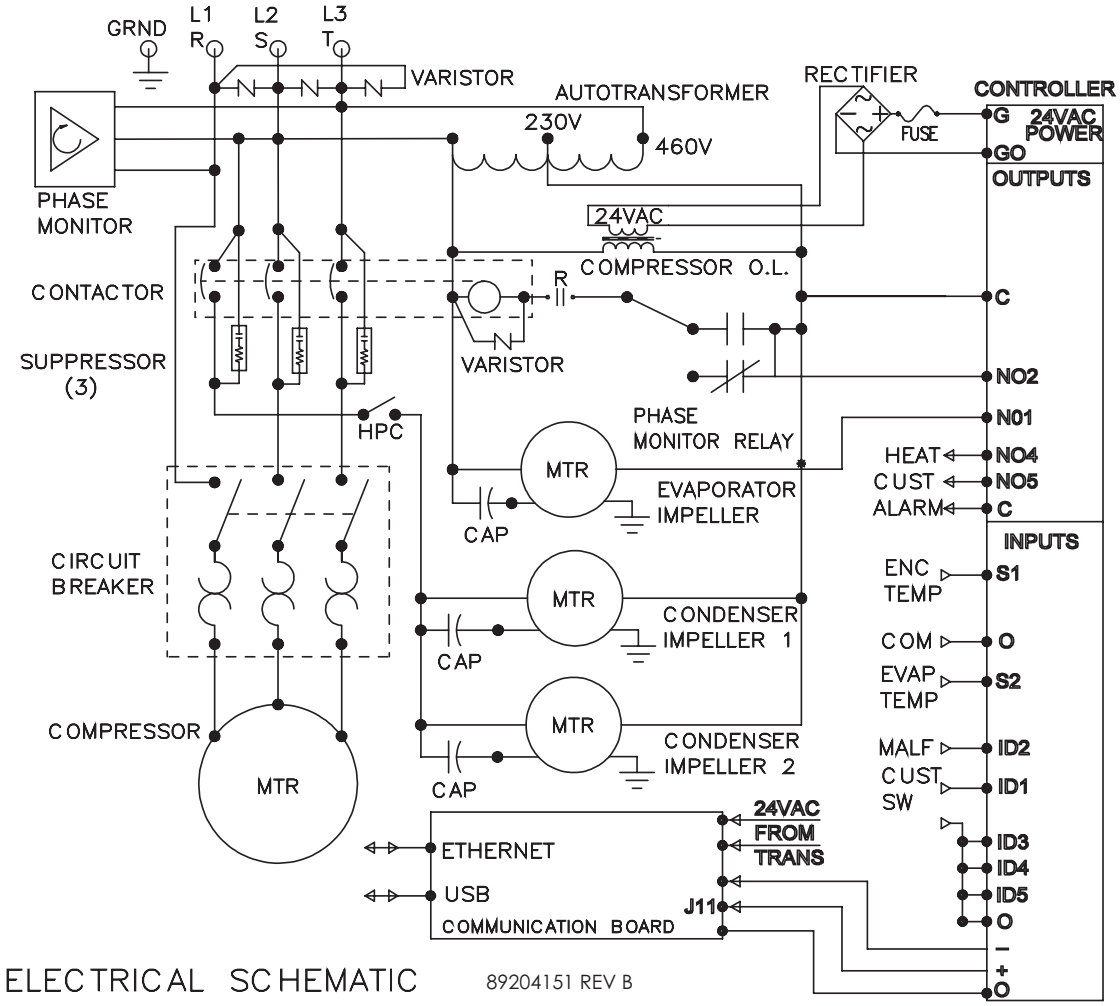

© 2022 nVent

G52 GENERIC WIRE DIAGRAM WITH REMOTE ACCESS CONTROL (ACTUAL UNIT OPTIONS MAY VARY)

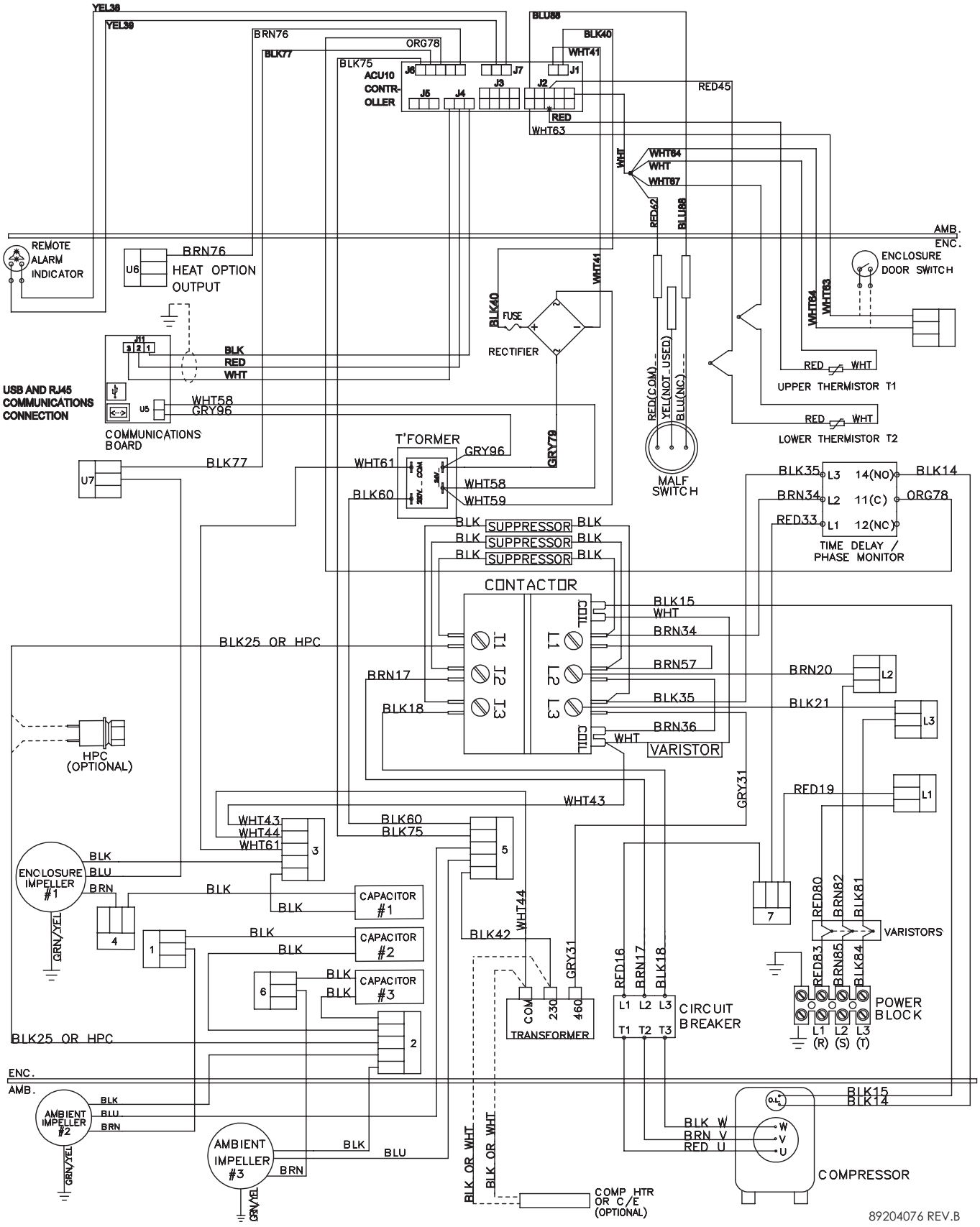

© 2022 nVent

DIMENSIONAL DRAWINGS

G52 GENERIC MODEL DRAWING WITH REMOTE ACCESS CONTROL

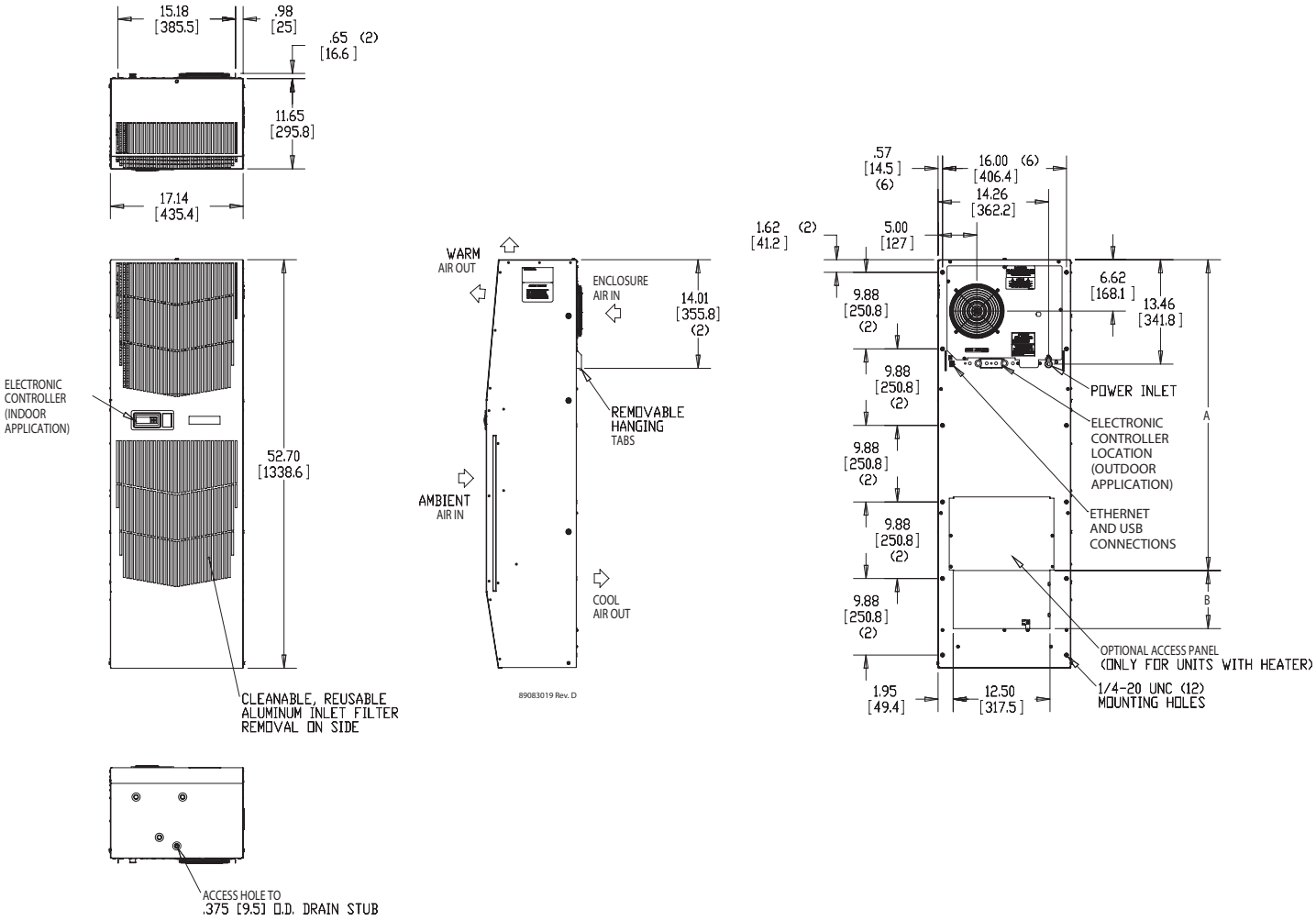

© 2022 nVent

MAINTENANCE

COMPRESSOR

The compressor requires no maintenance. It is hermetically sealed, properly lubricated at the factory and should provide years of satisfactory operating service.

Under no circumstances should the access fitting covers be loosened, removed or tampered with.

Breaking of seals on compressor access fittings during warranty period will void warranty on hermetic system.

Recharging ports are provided for the ease and convenience of reputable refrigeration repair service personnel for recharging the air conditioner.

INLET AIR FILTER

This air conditioner was designed with a dust resistant condenser coil. This allows it to be run filterless in most applications. The air conditioner is shipped with a filter in place for your convenience. For filterless operation, simply remove the filter. Should you decide the filter is necessary in your application, regular maintenance to clean this filter will assure normal operation of the air conditioner. The easily removable inlet air filter is located behind the front cover. If necessary filter maintenance is delayed or ignored, the maximum ambient temperatures under which the unit is designed to operate will be decreased.

If the compressor's operating temperature increases above designed conditions due to a dirty or clogged filter (or plugged condenser coil), the air conditioner's compressor will stop operating due to actuation of the thermal overload cut-out switch located on the compressor housing. As soon as the compressor temperature has dropped to within the switch's cut-in setting, the compressor will restart automatically. However the above condition will continue to take place until the filter or coil has been cleaned. It is recommended that power to the air conditioner be interrupted intentionally when abnormally high compressor operating temperature causes automatic shut-down of the unit. The above described shut-down is symptomatic of a clogged or dirty filter, thus causing a reduction in cooling air flow across the surface of the compressor and condenser coil.

HOW TO REMOVE, CLEAN OR INSTALL A NEW INLET AIR FILTER

RP aluminum washable air filters are designed to provide excellent filtering efficiency with a high dust holding capacity and a minimum amount of resistance to air flow. Because they are constructed entirely of aluminum they are lightweight and easy to service. To achieve maximum performance from your air handling equipment, air filters should be cleaned on a regular basis.

The inlet air filter is located behind the front access cover. To remove filter, push or pull to slide filter out from either side of the unit. The filter may now be cleaned or a new filter installed.

Cleaning Instructions:

1. Flush the filter with warm water from the exhaust side to the intake side. DO NOT USE CAUSTICS.
2. After flushing, allow filter to drain. Placing it with a corner down will assure complete drainage.

© 2022 nVent

CONDENSER AND EVAPORATOR AIR MOVERS

Impeller motors require no maintenance. All bearings, shafts, etc. are lubricated during manufacturing for the life of the motor.

If one of the condenser impeller motors (ambient impellers) should fail, it is not necessary to remove the air conditioner from the cabinet or enclosure to replace the blower. The condenser blower is mounted on its own bulkhead and is easily accessible by removing the front cover.

⚠ CAUTION

Operation of the air conditioner in areas containing airborne caustics or chemicals can rapidly deteriorate filters, condenser coils, blowers and motors, etc. Contact nVent Equipment Protection for special recommendations.

REFRIGERANT LOSS

Each air conditioner is thoroughly tested prior to leaving the factory to insure against refrigeration leaks. Shipping damage or microscopic leaks not found with sensitive electronic refrigerant leak detection equipment during manufacture may require repair or recharging of the system. This work should only be performed by qualified professionals, generally available through a local, reputable air conditioning repair or service company.

Should the refrigerant charge be lost, access ports on the suction and discharge sides of the compressor are provided for recharging and/or checking suction and discharge pressures.

Refer to the data on the nameplate which specifies the type of refrigerant and the charge size in ounces.

Before recharging, make sure there are no leaks and that the system has been properly evacuated into a deep vacuum.

F-GAS INFORMATION

	G520846GXXX	G521246GXXX
Refrigerant Kühlmittel Chłodziwo	R134a	R134a
GWP	1430	1430
Factory Charge Füllmenge durch Hersteller Opłata Fabryczna	652 Grams 652 Gramm 652 Gramów	1075 Grams 1075 Gramm 1075 Gramów
CO_2 Equivalent CO_2 Equivalent CO_2 Ekwilalent	0.93 Tons 0,93 Tonnen 0,93 Tony	1.54 Tons 1,54 Tonnen 1,54 Tony

© 2022 nVent

REFRIGERANT PROPERTIES CHART (R 134A)

°F	°C	Pressure		°F	°C	Pressure
-40	-40	-14.7		60	15.6	58
-35	-37.2	-12.3		65	18.3	64
-30	-34.4	-9.7		70	21.1	71.5
-25	-31.7	-6.8		75	23.9	78
-20	-28.9	-4		80	26.7	86.7
-15	-26.1	0		85	29.4	95
-10	-23.3	2		90	32.2	105
-5	-20.6	4		95	35	113.3
0	-17.8	7.5		100	37.8	125
5	-15	9		105	40.6	135
10	-12.2	12		110	43.3	146.7
15	-9.4	15		115	46.1	157.5
20	-6.7	18.5		120	48.9	170
25	-3.9	22		125	51.7	185
30	-1.1	26		130	54.4	197.5
35	1.7	30		135	57.2	213.3
40	4.4	35		140	60	230
45	7.2	40		145	62.8	246.7
50	10	45.5		150	65.6	263.8
55	12.8	51.5				

FUNCTIONAL DATA

Unit	Evaporator. Air In(°F)	Amps(A)	Condenser Delta(°F)	Evaporator Delta(°F)
G520846GXXX	65-70	2.0-2.8	8-22	15-26
	70-75	2.0-2.8	8-22	17-30
	75-80	2.1-2.9	8-22	18-31
	80-85	2.1-2.9	8-22	19-32
G521246GXXX	65-70	2.3-3.0	9-22	22-36
	70-75	2.3-3.0	9-23	23-37
	75-80	2.4-3.1	9-24	24-38
	80-85	2.4-3.1	10-25	24-38

© 2022 nVent

8000 BTU/HR. UNIT CHARACTERISTICS

	Part Number
	G520846GXXX
Dimensional Data	
Height	52.69/1338.44 mm
Width	17.12/435 mm
Depth	11.66/296.1 mm
Unit Weight	138 lbs/62.6 kg
Unit Protection Rating	Type 12/4/4X/3R
Cooling Data	
Refrigerant	R134A
Refrigerant Charge	23 oz
Cooling Capacity at 95 F Enclosure 95 F Ambient (BTU/Hr./W)	6700/7100
Cooling Capacity at Max Conditions (BTU/Hr./W)	7600/8300
Maximum Ambient Temp	131 F / 55 C
Minimum Ambient Temp	-40 F / -40 C
Enclosure Airflow	285/310 CFM
External Airflow	650/700 CFM
Condensate Management	Hose discharge / Optional powered C/E
Heating Data	
Capacity	2000 W
Electrical Data	
Rated Voltage (50/60 Hz)	400/460V 3 phase
Rated Frequency	50/60 Hz
Voltage Range	+/- 10% of rated
Cooling Amps at Max Conditions	2.4/2.8
Heating Amps	N/A
Compressor RLA / LRA	1.3/13.0
Evaporator Fan RLA*	.4
Condenser Fan RLA*	.4

© 2022 nVent

12000 BTU/HR. UNIT CHARACTERISTICS

	Part Number
	G521246GXXX
Dimensional Data	
Height	52.69/1338.4 mm
Width	17.12/435 mm
Depth	11.66/296.1 mm
Unit Weight	141 lbs / 64.0 kg
Unit Protection Rating	Type 12/4/4X/3R
Cooling Data	
Refrigerant	R134A
Refrigerant Charge	38 oz
Cooling Capacity at 95 F Enclosure 95 F Ambient (BTU/Hr./W)	8700/9800
Cooling Capacity at Max Conditions (BTU/Hr./W)	10500/11600
Maximum Ambient Temp	131 F / 55 C
Minimum Ambient Temp	-40 F / -40 C
Enclosure Airflow	287/305 CFM
External Airflow	635/650 CFM
Condensate Management	Hose discharge / Optional powered C/E
Heating Data	
Capacity	2000 W
Electrical Data	
Rated Voltage (50/60 Hz)	400/460V 3 phase
Rated Frequency	50/60 Hz
Voltage Range	+/- 10% of rated
Cooling Amps at Max Conditions	3.2/3.5
Heating Amps	N/A
Compressor RLA / LRA	2.2/20.0
Evaporator Fan RLA*	.4
Condenser Fan RLA*	.4

© 2022 nVent

SERVICE DATA

COMPONENTS LIST WITH THERMOSTAT

Part Description	Part Number	
	G520846GXXX	G521246GXXX
Capacitor, Impellers (3)	52-6032-14	52-6032-14
Coil, Condenser	89054510	52-6010-27
Coil, Evaporator	52-6010-13	52-6010-11
Compressor	89169477	89169478
Contactor, Compressor	89102057	89102057
Contactor, Heater	10-1005-42	10-1005-42
Filter, Air, Reusable	89119665	89119665
Filter/Dryer	52-6028-06	52-6028-06
Head Pressure Control Switch (option)	89083016	89083016
Heater, 1000 Watt (2)	89059149	89059149
Impeller, Condenser (2)	10-1091-124	10-1091-124
Impeller, Evaporator	10-1091-124	10-1091-124
Limit Switch (automatic)	10-1033-01	10-1033-01
Limit Switch (manual)	10-1033-07	10-1033-07
Overload, Compressor	89098326	89098326
Relay, Phase Monitor	89117576	89117576
Thermal Expansion Valve	10-1040-42	10-1040-31
Thermal Overload, Compressor	89171728	89171728
Thermostat, SPDT, 55-100F	10-1061-16	10-1061-16
Transformer 460/230V 400VA	10-1006-128	10-1006-128

© 2022 nVent

COMPONENTS LIST WITH REMOTE ACCESS CONTROL

Part Description	Part Number	
	G520846GXXX	G521246GXXX
315 mA Fuse	89085114	89085114
Bridge Rectifier	89087424	89087424
Capacitor, Impellers (3)	52-6032-14	52-6032-14
Coil, Condenser	89054510	52-6010-27
Coil, Evaporator	52-6010-13	52-6010-11
Communication Board	89145457	89145457
Compressor	89169477	89169478
Contactor, Compressor	10-1005-77	10-1005-77
Contactor, Heater	10-1005-42	10-1005-42
Controller, Basic	89202719	89202719
Filter, Air, Reusable	89119665	89119665
Filter/Dryer	52-6028-06	52-6028-06
Head Pressure Control Switch (option)	89083016	89083016
Heater, 1000 Watt (2)	89059149	89059149
Impeller, Condenser (2)	10-1091-124	10-1091-124
Impeller, Evaporator	10-1091-124	10-1091-124
Limit Switch (automatic)	10-1033-01	10-1033-01
Limit Switch (manual)	10-1033-07	10-1033-07
Relay, Phase Monitor	89117576	89117576
Thermal Expansion Valve	10-1040-42	10-1040-31
Thermal Overload, Compressor	89171728	89171728
Transformer 460/230V 400VA	10-1006-128	10-1006-128
Circuit Breaker Control	10-1060-69	10-1060-69

© 2022 nVent

NOTES

© 2022 nVent

TROUBLE SHOOTING

BASIC AIR CONDITIONING TROUBLE SHOOTING CHECK LIST - THERMOSTAT VERSION

1. Check manufacturer's nameplate located on the unit for correct power supply.
2. Turn on power to the unit. The evaporator (Enclosure or "COLD" air) impeller should come on. Is there airflow?

YES, proceed to step 3.		
NO, possible problem: » Open motor winding » Stuck impeller motor » Obstructed wheel	→	**Repair or Replace defective part**

3. Check phase monitor indicator light, is it Illuminated?

YES, proceed to step 4.		
NO, possible problem: » Incorrect electrical phasing	→	De-energize unit and swap any two power leads to unit. If problem still persists, replace phase monitor. Refer to phase monitor section of this manual for additional information.

4. Check thermostat setting and adjust thermostat to the lowest setting. This should turn the condenser impellers and the compressor on. Did condenser impellers and compressor come on when the thermostat was turned on?

YES, proceed to step 5.		
NO, possible problem: » Tripped customer door switch » Defective thermostat	→	**Replace part**

5. Are all impellers and the compressor running? If not the unit will not cool properly.
6. Check condenser (Ambient or "HOT" air) impellers for airflow. Is there airflow?

YES, proceed to step 7.		
NO, possible problem: » Defective thermostat » Open motor winding » Stuck impeller motor » Obstructed wheel	→	**Repair or Replace defective part**

7. Carefully check the compressor for operation - motor should cause slight vibration, and the outer case of the compressor should be warm. Is the compressor showing signs of this?

YES, wait 5 minutes, then proceed to step 8.		
NO, possible problem: » Defective thermostat » Defective overload » Defective relay	→	**Repair or Replace defective part**

© 2022 nVent

8. Make sure the coils are clean. Then check evaporator “air in” and “air out” temperatures. If the temperatures are the same:

» Possible loss of refrigerant » Possible bad valves in the compressor	→	**Repair or Replace defective part**

9. To check for a bad thermostat, turn power to the unit off. Remove the upper access panel and place both thermostat wires onto one terminal (replace upper access panel for safety). This will activate the switch in the thermostat. Turn the power on and if all impellers and the compressor come on, the thermostat needs to be replaced.

SYMPTOMS AND POSSIBLE CAUSES - THERMOSTAT VERSION

SYMPTOM	POSSIBLE CAUSE
Unit won’t cool	Clogged fins on coil(s)
	Dirty filter
	Impellers not running
	Compressor not running
	Compressor runs, but has bad valves
	Loss of refrigerant
Compressor tries to start but won’t run	Low line voltage at start. Should be +/-10% rated voltage.
	Compressor motor stuck
	Bad contactor
	Bad overload switch
	Bad run/start capacitor
Unit blows breakers	Undersized breaker/fuse or not time delayed
	Short in system
Getting water in enclosure	Drain plugged
	Drain tube kinked
	Enclosure not sealed (allowing humidity in)
	Mounting gasket damaged

For additional technical support, contact nVent Equipment Protection at 800-896-2665.

© 2022 nVent

BASIC AIR CONDITIONING TROUBLE SHOOTING CHECK LIST - REMOTE ACCESS CONTROL VERSION

1. Check manufacturer's nameplate located on the unit for correct power supply.
2. Turn on power to the unit. The controller will display a start up sequence then revert to the normal temperature display mode. Is the correct enclosure temperature displayed?

   Note: The temperature may be alternating with an alarm code.

YES, proceed to step 3.		
NO, possible problem: » Open controller fuse » Controller in alarm condition. See View alarms on page 16. » Defective controller » Defective thermistor - check by blowing warm air across the thermistor. If display temperature rises, thermistor is operable.	→	**Replace part**

3. The cooling status indication (symbol G) should be on. Is the symbol on? If not, press and hold the lower right "snowflake" button for greater than five seconds. Is the cooling mode symbol now on?

YES, proceed to step 4.		
NO, possible problem: » Defective controller	→	**Replace part**

4. The evaporator (Enclosure or "COLD" air) fan/impeller should turn on. Is there airflow?

YES, proceed to step 5.		
NO, possible problem: » Controller in alarm condition. See View alarms on page 16. » Open motor winding » Stuck fan/impeller » Obstructed blades/wheel » Defective motor capacitor	→	**Repair or Replace defective part**

5. Check phase monitor indicator light, is it Illuminated?

YES, proceed to step 6.		
NO, possible problem: » Incorrect electrical phasing	→	De-energize unit and swap any two power leads to unit. If problem still persists, replace phase monitor. Refer to phase monitor section of this manual for additional information.

6. Start the cooling cycle by changing the cooling setpoint parameter (r01) to the low limit of 72 F (22 C). Symbol 1 should be displayed indicating a call for cooling. If symbol 1 is flashing, the unit is in Restart Time Delay mode. Within 6 minutes, symbol 1 should display without flashing. Is symbol 1 displayed without flashing?

YES, proceed to step 7.		
NO, possible problem: » Unit still in Recycle Time Delay mode » Enclosure temperature below cooling setpoint temperature	→	**Wait and/or heat enclosure thermistor T1**

© 2022 nVent

7. The compressor and the condenser (Ambient or “HOT” air) impeller(s) should turn on. Is there adequate airflow?

YES, proceed to step 8.
NO, possible problem: » Open motor winding(s) » Stuck impeller(s) » Obstructed wheel(s) » Defective motor capacitor(s) → **Repair or Replace defective part**

8. Carefully check the compressor for proper operation - motor should cause slight vibration and the outer case of the compressor should be warm. Is the compressor showing signs of this?

YES, wait 5 minutes, proceed to step 9.
NO, possible problem: » Defective start or run capacitor » Defective overload » Defective start relay » Defective contactor » Defective compressor → **Repair or Replace defective part**

9. Make sure the coils are clean then check the evaporator “air in” and “air out” temperatures. If the temperatures are the same:

» Possible loss of refrigerant » Possible bad valves in compressor → **Repair or Replace defective part**

SYMPTOMS AND POSSIBLE CAUSES - REMOTE ACCESS CONTROL VERSION

SYMPTOM	POSSIBLE CAUSE
Unit won’t cool	Clogged fins on coil(s)
	Dirty filter
	Impellers not running
	Compressor not running
	Compressor runs, but has bad valves
	Loss of refrigerant
Compressor tries to start but won’t run	Low line voltage at start. Should be +/-10% rated voltage.
	Compressor motor stuck
	Bad contactor
	Bad overload switch
	Bad run/start capacitor
Unit blows breakers	Undersized breaker/fuse or not time delayed
	Short in system
Getting water in enclosure	Drain plugged
	Drain tube kinked
	Enclosure not sealed (allowing humidity in)
	Mounting gasket damaged

For additional technical support, contact nVent Equipment Protection at 800-896-2665.

© 2022 nVent

nVent
2100 Hoffman Way
Anoka, MN 55303 USA
☎ +1.763.422.2211
+1.763.576.3200

nVent.com

© 2022 nVent
P/N 89209669

89209669